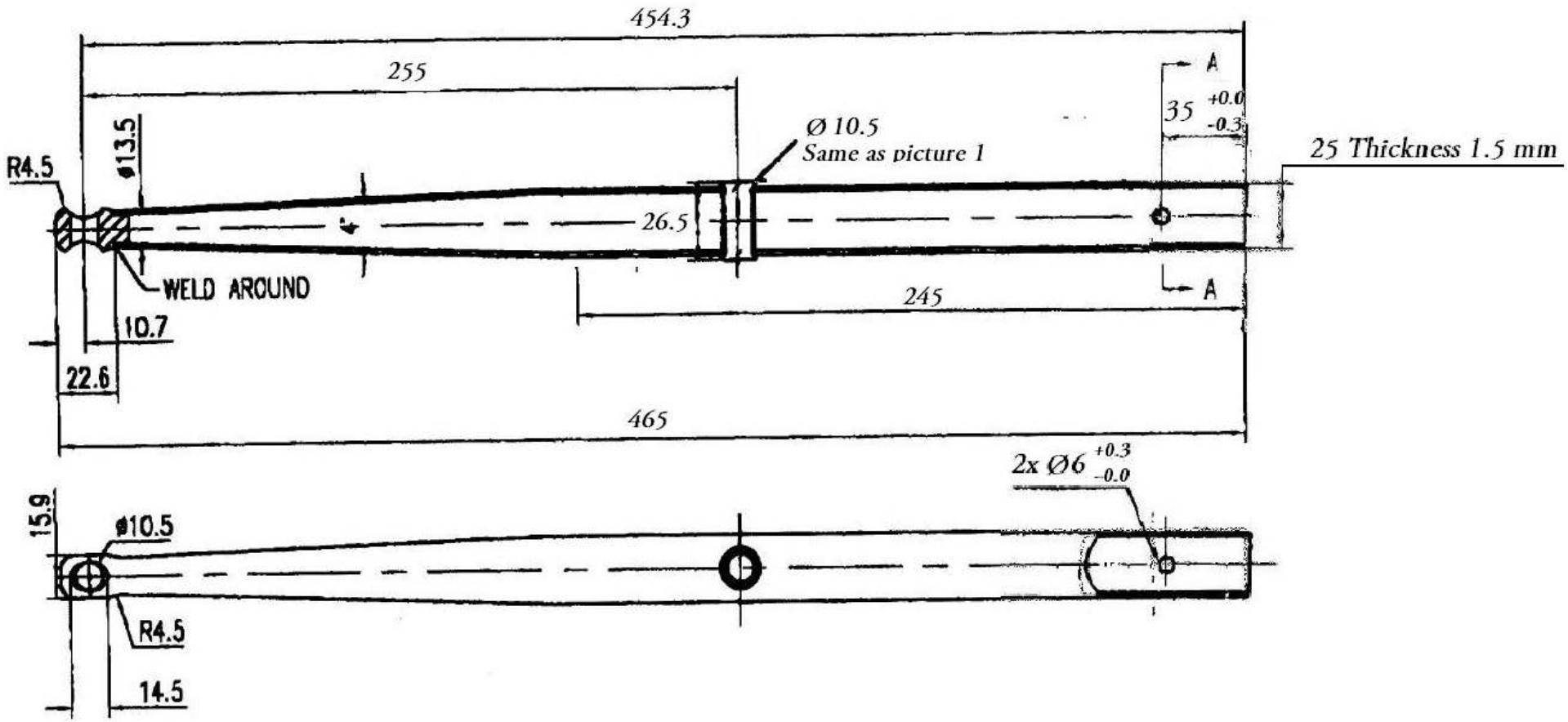

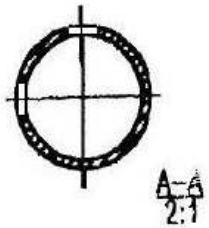

DO NOT SCALE DRAWING	REVISION
OSCULATI	
TITLE:	
DWG: 41.174.39	A4
SCALE:1:1	SHEET 1 OF 1